Chapter 10 (Part 3) – AC Sinusoidal Current

A-Definition

An alternating sinusoidal current can be delivered by an alternator or LFG generator. Its expression is of the form

$$i = I_m \sin(\omega t + \varphi) \quad \text{where:}$$

- i is the current intensity at an instant t.
- I_m is the amplitude (the maximum value) of i in amperes (A); I_m is always positive.
- ω is the pulsation of the current in rad/s; $\omega = \frac{2\pi}{T} = 2\pi f$ with T is the period in seconds (s) and f is the frequency in hertz (Hz).
- $(\omega t + \varphi)$ is the phase at the instant t expressed in radians (rad).
- φ is the phase, in rad, at the origin of time (i.e., at t = 0).

We know that $-1 \leq \sin(\omega.t + \varphi) \leq +1$.

By multiplying by I_m we get then:

$$-I_m \leq I_m \sin(\omega.t + \varphi) \leq +I_m$$
$$\text{Finally, } -I_m \leq i(t) \leq +I_m$$

B-Ohm's Law in AC mode

A dipole (D) is connected between A and B. (D) is traversed by an AC sinusoidal current of intensity ***i. Ohm's Law is a relationship between this current and the voltage u_D across the dipole (D)***.

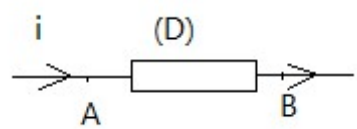

Let's assume in this part that:

$$i = I_m \sin(\omega t) \text{ and } u_D = U_{mD} \sin(\omega.t + \varphi)$$

where $\varphi = \varphi_{u_{D/i}} = \Delta\varphi = \varphi_{u_D} - \varphi_i = \varphi_{u_D}$

App 10.1-page 176

The Lebanese Electricity Board (LE) delivers an alternating sinusoidal voltage u of effective value U = 230 V, and of frequency f = 50 Hz. Calculate the period and give the expression of the voltage when the initial phase is zero.

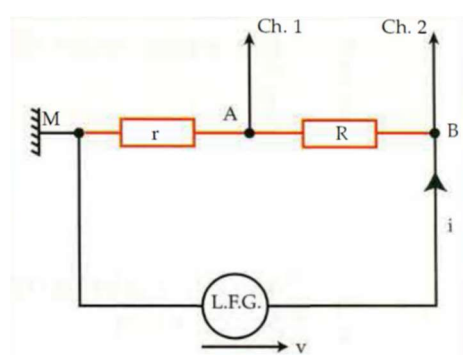

1) Case of a resistor of resistance R

By Ohm's Law: $u_R(t) = R.i(t)$

$\Rightarrow U_{mR} \sin(\omega.t + \varphi) = R.I_m \sin(\omega t) \quad \forall t$

By identification: $U_{mR} = R.I_m$ and $\varphi_{u_R} = 0$

The phase difference of u_R relative to $i = \Delta\varphi = \varphi_{u_R} - \varphi_i = \varphi_{u_R} = 0$, then u_R and i are in phase: $\varphi_{u_{R/i}} = 0$.

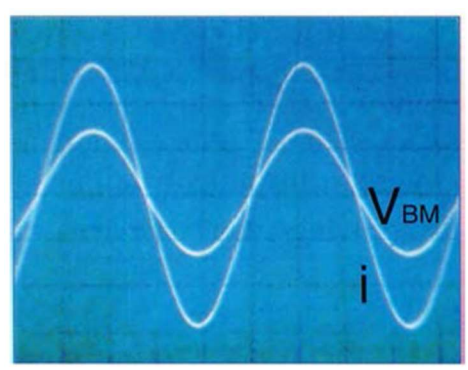

2) Case of a purely inductive coil (L ; r = 0)

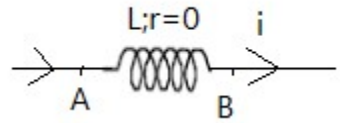

Ohm's Law for a coil oriented from A to B:

$u_L = ri + L\frac{d_i}{dt}$ (with $r = 0$ here)

$\Rightarrow u_L = L\dfrac{di}{dt}$

$\Rightarrow U_{mL}\, sin(\omega t + \varphi) = L\dfrac{d}{dt}(I_m\, sin(\omega t))$

$\Rightarrow U_{mL}\, sin(\omega t + \varphi) = L\omega I_m\, cos(\omega t)$

Since: $cos(\omega t) = sin\,(\frac{\pi}{2} + \omega t)$

$\Rightarrow U_{mL}\, sin(\omega t + \varphi) = L\omega I_m\, sin(\frac{\pi}{2} + \omega t) \quad \forall\, t$

By identification: $U_{mL} = L\omega I_m$ and $\varphi_{u_{L/i}} = +\frac{\pi}{2}$ rad

The voltage u_L across the terminal of a purely inductive coil is in phase advance by $\frac{\pi}{2}$ rad relative to the current i: the voltage leads the current by $\frac{\pi}{2}$ rad ($\varphi_{u_{L/i}} = +\frac{\pi}{2}$ rad) or the current lags behind the voltage by $\frac{\pi}{2}$ rad ($\varphi_{i/u_L} = -\frac{\pi}{2}$ rad).

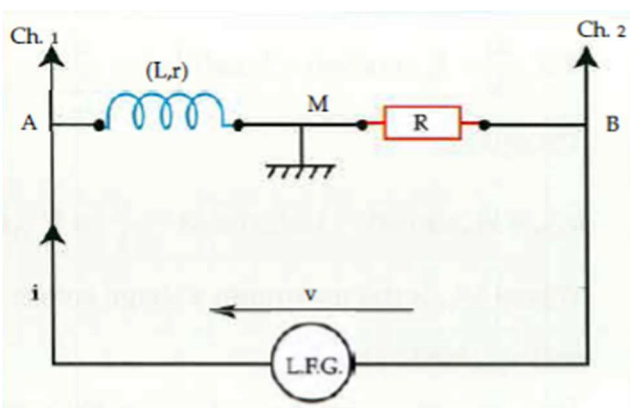

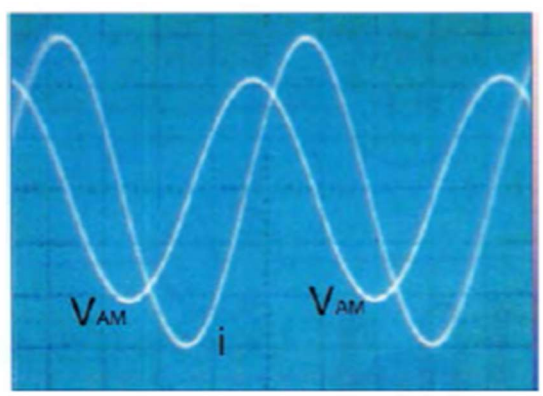

On the oscilloscope screen, i reaches its maximum after u (or i intercepts the time axis after u in the same direction).

Note:

To calculate the phase difference between 2 oscillograms got on the oscilloscope scree we apply the formula:

$$|\varphi| = 2\pi\frac{d}{D}\text{, with}$$

- d is the number of divisions that separates the points of intersection of the 2 curves with the horizontal axes.
- D is the number of divisions that cover a complete period *T*.

App 10.2-page 177

The figure represents two sinusoidal voltages u_1 and u_2 of same angular frequency and same amplitude. Their initial phases are different. Determine the phase difference between and u_2 and u_1.

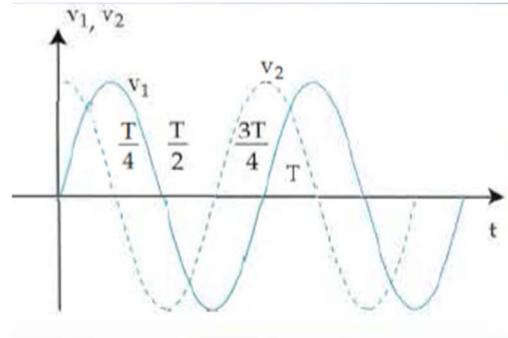

<u>Case where the coil is resistive (L ; r) :</u>

Ohm's Law for a coil oriented from A to B: $u_{AB} = r.i + L\,\frac{di}{dt}$

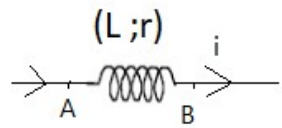

$$\Rightarrow U_{mL}\,sin(\omega t+\varphi) = r.I_m sin\omega t + L\frac{d}{dt}(I_m\,sin(\omega t))$$

$$\Rightarrow U_{mL}\,sin(\omega t+\varphi) = r.I_m sin\omega t + L\omega I_m\,cos(\omega t) \quad \forall\, t$$

- For t = 0 $\omega t = 0$ then: $U_{ml}\,sin(0+\varphi) = r.I_m\sin(0) + L\omega I_m\cos(0)$

  As result: $U_{mL}\sin(\varphi) = 0 + L\omega I_m$ or $U_{mL}\,sin(\varphi) = L\omega.I_m$ eq. (1)

- For t = $\frac{T}{4}$ $\omega t = \frac{2\pi}{T}.\frac{T}{4} = \frac{\pi}{2}\ rad$ then $U_{mL}\,sin\left(\frac{\pi}{2}+\varphi\right) = r.I_m sin\frac{\pi}{2} + L\omega I_m cos\frac{\pi}{2}$

  As result: $U_{mL}\cos(\varphi) = r.I_m + 0$ or $U_{mL}\cos(\varphi) = r.I_m$ eq. (2)

- $\frac{(1)}{(2)} \rightarrow \frac{U_{mL}\sin(\varphi)}{U_{mL}\cos(\varphi)} = \frac{L\omega.I_m}{r.I_m} \Rightarrow tan(\varphi_{u_L}) = \frac{L\omega}{r} >\Rightarrow \varphi_{u_{L/i}} > 0$

  So $u_{(L)}$ is in phase advance % i (or i lags behind u_L)

- $(1)^2 + (2)^2 \rightarrow$ $(\ U_{mL}\,sin(\varphi))^2 + (U_{mL}\,cos(\varphi))^2 = (L\omega.I_m)^2 + (r.I_m)^2$

$$\Rightarrow U_{mL}^2.sin^2(\varphi) + U_{mL}^2.cos^2(\varphi) = L^2\omega^2 I_m^2 + r^2 I_m^2$$

$$\Rightarrow U_{mL}^2\big(sin^2(\varphi) + cos^2(\varphi)\big) = (L^2\omega^2 + r^2)I_m^2 \Rightarrow U_{mL}^2 = (L^2\omega^2 + r^2)I_m^2$$

$$\Rightarrow U_{mL} = \sqrt{(L^2\omega^2 + r^2)I_m^2} \qquad \text{So } U_{mL} = I_m.\sqrt{(L^2\omega^2 + r^2)}$$

3) <u>Case of a capacitor of capacitance C:</u>

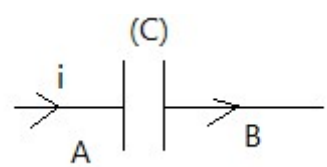

$$i = \frac{dq}{dt} = C\frac{duc}{dt} \Rightarrow C.du_C = i.d \Rightarrow du_C = \frac{i}{C}dt$$

$\Rightarrow \int du_C = \int \frac{i}{C}dt \ \Rightarrow u_C = \frac{1}{C}\int idt$ (C = constant)

As result: $U_{mc}sin\,(\omega t + \varphi_{u_c}) = \frac{1}{C}\int I_m sin(\omega t)dt$

Since $\int sin(\omega t)dt = -\frac{1}{\omega}cos\,(\omega t)$ then $U_{mc}sin\,(\omega t + \varphi_{u_c}) = -\frac{I_m}{C\omega}\,cos\,(\omega t)$

$U_{mc} sin\ (\omega t + \varphi_{u_c}) = \frac{I_m}{C\omega}\ sin\ (\omega t - \frac{\pi}{2})$

By identification we get: $U_{mc} = \frac{I_m}{C\omega}$ and $\varphi_{u_{c/i}} = -\frac{\pi}{2} rad$

Conclusion: u_C lags behind i by $\frac{\pi}{2} rad$ or i is in phase advance by $\frac{\pi}{2} rad$ relative to u_C $(\varphi_{i/u_c} = +\frac{\pi}{2} rad)$

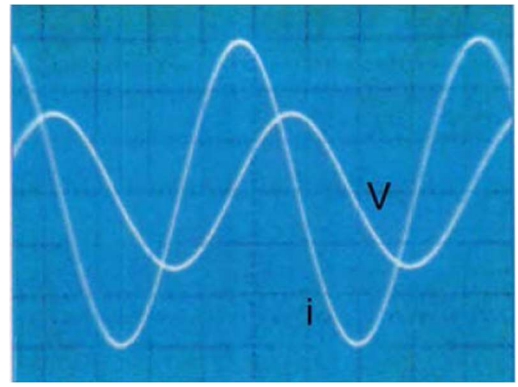

Remember:

$sin\left(\omega t + \frac{\pi}{2}\right) = cos(\omega t)$		$sin\left(\omega t - \frac{\pi}{2}\right) = -cos(\omega t)$
$\int cos(\omega t)dt = \frac{1}{\omega} sin(\omega t)$		$\int sin(\omega t)dt = -\frac{1}{\omega} cos(\omega t)$
Dipole	***Maximum Voltage***	***Phase Difference between i & u_D***
Resistor of resistance R	$U_{m(R)}$=R.I_m	$\varphi_{i/u_R} = 0$ i & u_R *are in phase*
Coil purely inductive (L ; r = 0)	$U_{m(L)}$=L.ω.I_m	$\varphi_{u_L/i} = +\frac{\pi}{2}\ rad > 0$ u_L *leads i by* $\frac{\pi}{2} rad$
Coil (L ; r)	$U_{m(L)} = I_m.\sqrt{(L^2\omega^2 + r^2)}$	$\tan\ (\varphi_{u_L}) = \frac{L\omega}{r} > 0$ $\varphi_{u_L/i} > 0$ $(0 < \varphi_{u_L/i} < \frac{\pi}{2})$ *i lags behind* u_L
Capacitor of capacitance C	$U_{m(C)}$=$\frac{1}{C\omega}$.I_m	$\varphi_{u_C/i} = -\frac{\pi}{2}\ rad$ *i leads* u_C *by* $\frac{\pi}{2} rad$

C- R-L-C Series Circuit – Current Resonance

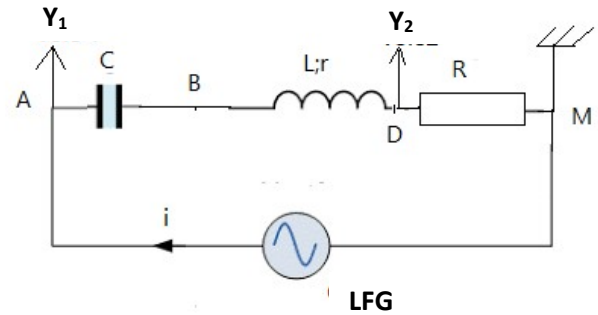

In this part, we give:

$u_G(t) = U_{m(G)}.sin\,(\omega t + \varphi)$ *and* $i(t) = I_m.sin\,(\omega t)$

Let's determine: $U_{m(G)}$ and φ

By the law of addition of voltages: $u_G = u_L + u_C + u_R$

$\Rightarrow u_G = ri + L\frac{di}{dt} + \frac{1}{C}\int idt\ + R.i \Rightarrow u_G = (R+r)i + L\frac{di}{dt} + \frac{1}{C}\int i.dt$

$\Rightarrow U_{m(G)}.sin(\omega t + \varphi) = (R+r)I_m.sin(\omega t) + L\frac{d}{dt}[I_m sin(\omega t)] + \frac{1}{C}\int I_m sin(\omega t)dt$

$\Rightarrow U_{m(G)}.sin(\omega t + \varphi) = (R+r)I_m.sin(\omega t) + L\omega I_m.cos(\omega t) - \frac{I_m}{C\omega}.cos\,(\omega t)$ for all t

- For $\omega t = 0$ or $t = 0$:
  $U_{m(G)}.sin(0 + \varphi) = (R+r)I_m.sin(0) + L\omega I_m.cos(0) - \frac{I_m}{C\omega}.cos\,(0)$

  $\Rightarrow U_{m(G)}.sin(\varphi) = L\omega I_m - \frac{I_m}{C\omega}$ or $U_{m(G)}.sin(\varphi) = \left(L\omega - \frac{1}{C\omega}\right).I_m$ (1)

- For $\omega t = \frac{\pi}{2}\ rad$ or $t = \frac{\pi}{2\omega} = \frac{\pi}{2.\frac{2\pi}{T}} = \frac{T}{4}$ (s):
  $U_{m(G)}.sin\left(\frac{\pi}{2} + \varphi\right) = (R+r)I_m.sin\left(\frac{\pi}{2}\right) + L\omega I_m.cos\left(\frac{\pi}{2}\right) - \frac{I_m}{C\omega}.\cos\left(\frac{\pi}{2}\right)$
  $\Rightarrow U_{m(G)}.cos(\varphi) = (R+r)I_m + 0 + 0$ or $\Rightarrow U_{m(G)}.cos(\varphi) = (R+r)I_m$ (2)
- $\frac{(1)}{(2)} \rightarrow \frac{U_{m(G)}sin\,\varphi}{U_{m(G)}cos\varphi} = \frac{L\omega - \frac{1}{C\omega}}{R+r}$ then $tan(\varphi) = \frac{L\omega - \frac{1}{C\omega}}{R+r}$
- $(1)^2 \rightarrow U^2_{mG}\sin^2\varphi = (L\omega - \frac{1}{C\omega})^2 \cdot I^2_m$ and $(2)^2 \rightarrow U^2_{mG}\cos^2\varphi = (R+r)^2 .I_m^2$

  $(1)^2 + (2)^2 \rightarrow U^2_{mG}(\sin^2\varphi + \cos^2\varphi) = \left[[(R+r)]^2 + (L\omega - \frac{1}{C\omega})^2\right] I_m^2$

  So $I_m^2 = \frac{U^2_{m(G)}}{\left[[(R+r)]^2 + (L\omega - \frac{1}{C\omega})^2\right]}$

  Finally: $I_m = \frac{U_{m(G)}}{\sqrt{(R+r)^2 + (L\omega - \frac{1}{C\omega})^2}}$

3 cases to consider :

- If $L\omega > \frac{1}{C\omega}$, then tanφ > 0, $\varphi_{u_{G/i}} > 0$ which means u_G leads i or i lags behind u_G. The circuit is inductive.
- If $L\omega > \frac{1}{C\omega}$, then tanφ < 0, $\varphi_{u_{G/i}} < 0$ which means i leads u_G or u_G lags behind i. The circuit is capacitive.
- If $L\omega = \frac{1}{C\omega}$, then $L\omega - \frac{1}{C\omega} = 0$ or $LC\omega_0^2 = 1$ then tanφ = 0 so $\varphi_{u_{G/i}} = 0$. We say there is resonance of intensity: u_G and i are in phase; the R-L-C series circuit is resistive: it behaves as a resistor of resistance R + r.

At the intensity resonance:

- I_m is maximum
- $\omega_0^2 = \frac{1}{LC}$; $\omega_0 = \frac{1}{\sqrt{LC}}$
- $f = f_0 = \frac{\omega_0}{2\pi} = \frac{1}{2\pi\sqrt{L.C}}$ and $T = T_0 = 2\pi\sqrt{L.C}$

Curve for Intensity Resonance

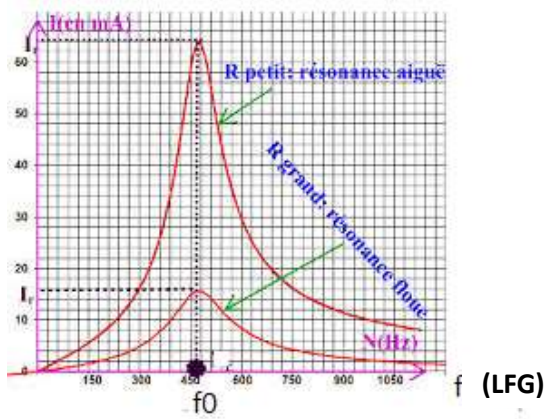

(LFG)

Equivalent Circuit Diagram in Resonance

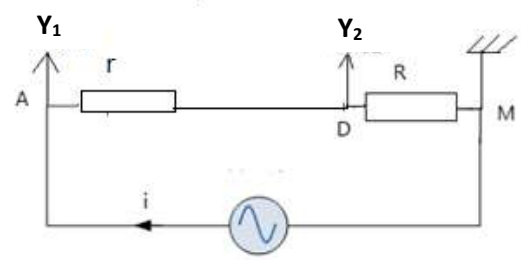

(LFG)

$U_{mG} = (R + r).I_m$ with $I_m = \frac{U_{m(R)}}{R}$

D-Average Power consumed by a Dipole (D)

$P_{average} = U_{effective} \cdot I_{effective} \cdot cos(\varphi_{u_{D/i}})$ with $U_{eff} = \frac{Um}{\sqrt{2}}$ and $I_{eff} = \frac{Im}{\sqrt{2}}$

$cos(\varphi)$ is called power factor.

1) **For a resistor of resistance R**

$P_{av} = U_R.I.\cos\left(\varphi_{u_{R/i}}\right) = R.I.I.\cos(0)$

Then $P_{av} = R.I^2$

2) **For a purely inductive coil (L ; r = 0)**

$P_{av} = U_L.I.\cos\left(\varphi_{u_{L/i}}\right) = U_L.I.cos\left(\frac{\pi}{2}\right) = 0\ watt$

3) **For a coil (L ; r)**

$P_{av} = U_L.I.\cos\left(\varphi_{u_{L/i}}\right)$ or $P_{av} = P_L + P_r = 0 + r.I^2$ as result $P_{av} = r.I^2$

4) **For a capacitor of capacitance C**

$P_{av} = U_C.I.\cos\left(\varphi_{u_{C/i}}\right) = U_C.I.\cos\left(-\frac{\pi}{2}\right) = 0$ then $P_{av(C)} = 0\ watt$

5) For an R-L-C series circuit

$P_{av} = U_G.I.\cos\left(\varphi_{u_{G/i}}\right)$ or $P_{av} = P_C + P_L + P_R = 0 + 0 + r.I^2 + R.I^2$ as result $P_{av} = (R + r).I^2$

Notes:

- ✓ Form the oscillograms obtained on the screen of the oscilloscope, we can calculate:
  - The maximum value or the amplitude of a voltage: $U_m = y \times s_{\mathrm{v}}$
  - The period: $T = x \times s_{\mathrm{h}}$ and the phase difference: $\Delta\varphi = \frac{2\pi}{D}$

  Where
  d (or t) is the number of divisions separating the 2 points of intersection of the 2 curves with the time axis.

  D (or T) is the number of divisions that cover a period (D = x can be found by counting the number of divisions between 2 consecutive maxima on the same curve).

  S_h : horizontal sensibility in s/division

  S_V : vertical sensibility in V/division
- ✓ The effective intensity of the current is measured by an ammeter connected in series with the dipole.
- ✓ The effective voltage is measured by a voltmeter connected in parallel across the terminals of a dipole.

$R - R'$ Circuit	$U_{mG} = (R + R').I_m$	$\varphi_{u_{G/i}} = 0$
$R - L$ Circuit	$U_{mG} = I_m\sqrt{(R + r)^2 + L^2\omega^2}$	$\varphi_{u_{G/i}} > 0$
$R - C$ Circuit	$U_{mG} = I_m\sqrt{R^2 + \frac{1}{C^2\omega^2}}$	$\varphi_{u_{G/i}} < 0$
$R - L - C$ Circuit	$U_{mG} = I_m\sqrt{(R + r)^2 + (L\omega - \frac{1}{C\omega})^2}$	If $\omega < \omega_0$ *then* $\varphi_{u_{G/i}} < 0$ If $\omega > \omega_0$ *then* $\varphi_{u_{G/i}} > 0$ If $\omega = \omega_0 = \frac{1}{LC}$ *then* $\varphi_{u_{G/i}} = 0$. There is an intensity resonance: I_m is max.